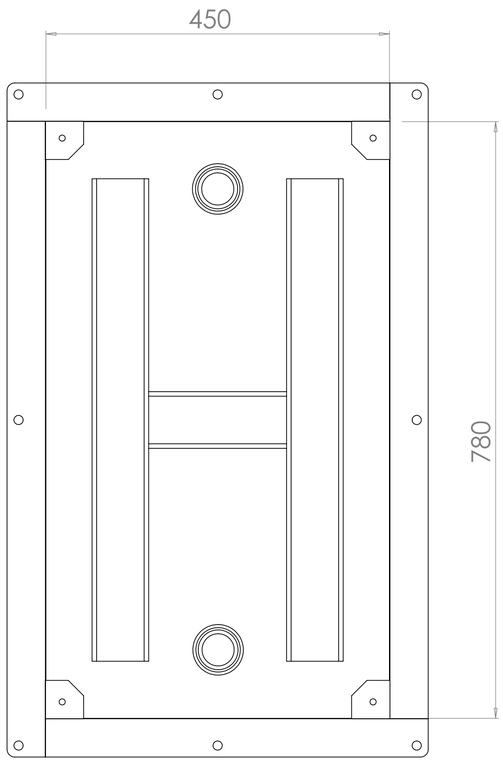

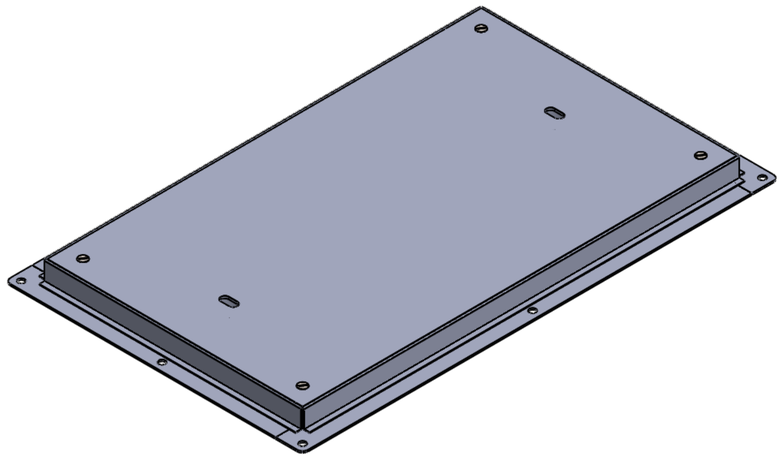

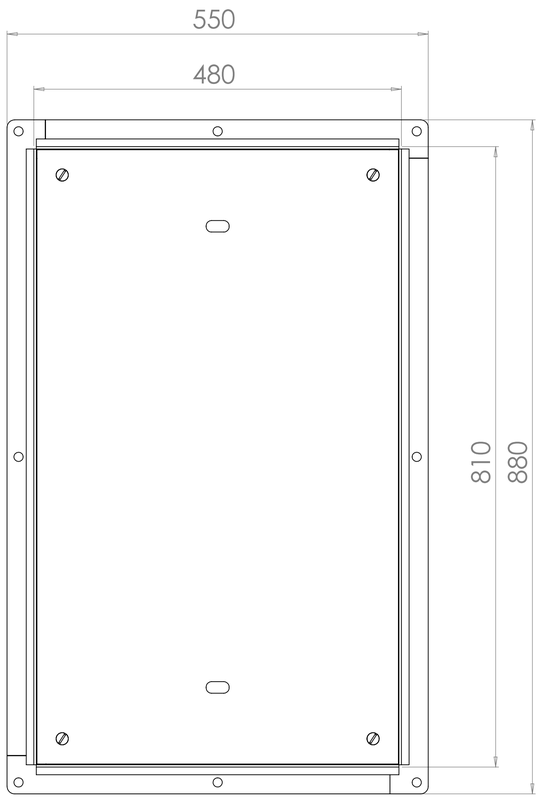

DRAWING NOTES:

REV:	ALTERATIONS MADE:	DRAWN:	APP'D:	DATE:
-	-	-	-	-
-	-	-	-	-
1	Changed Frame Overall to 810x480mm	NR	-	11/02/2016

ALL DIMENSIONS IN MILIMETERS - DO NOT SCALE

THIRD ANGLE PROJECTION

Fabweld Steel Products Ltd
Value and service for our customers through our people

Fabweld Steel Products Ltd
Units D11-D13 Court 2000
Madeley, Telford, TF7 4JB

Tel: 01952 581430
Fax: 01952 586141
www.manholes.co.uk

PART CODE: SOT0004078

PART DESCRIPTION:
780x450mm c/o Solid Top/Galvanised Mild Steel/Unsealed/Locking Screws/Light Duty/50mm Wide Flange c/w 4no 14mm Fixing Holes

DRAWN BY:	NR
APPROVAL REQUIRED:	YES
APPROVED BY:	CW
DATE:	11/02/2016

REVISION: 1